AlternatiK

MECHANICAL

0,8t 9t

2 GUARANTEE

PATENTED



- Automatic locking
- Integrated safety cam
- Uses the original pins of your machine
- Cast steel parts guaranteeing longevity and robustness
- Compatibility with Retromatic® accessories.

TAILOR MADE INNOVATION

The new amendment of the European standards imposes a locking system able to secure the quick hitch.

AlternatiK offers a **single safety system**, on the hitch, which guarantees compatibility and total compliance with current standards of the existing attachments.

TECHNICAL FEATURES

High elasticity steel for the brackets (welded). Original pins are used.

Safety on the hitch only, due to the dual cam. Disengagement and unlocking are simultaneous.

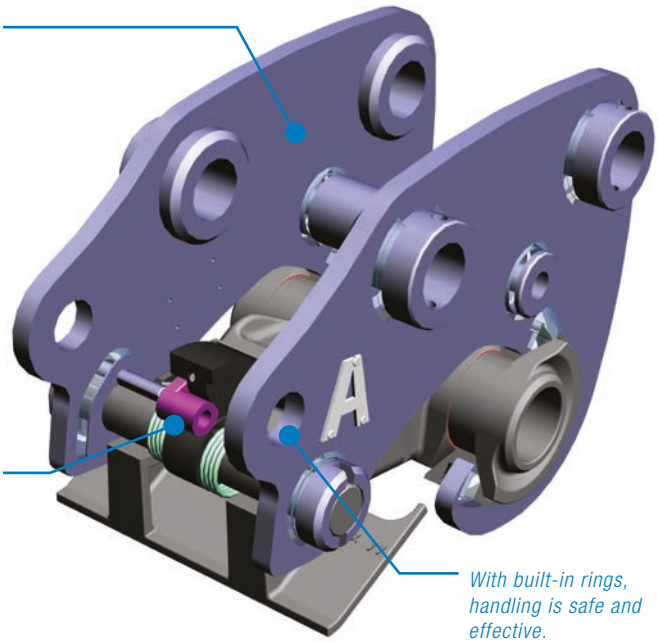

With built-in rings, handling is safe and effective.



The second cam automatically prevents disengagement of the kit.

Cast steel top plate (kit).

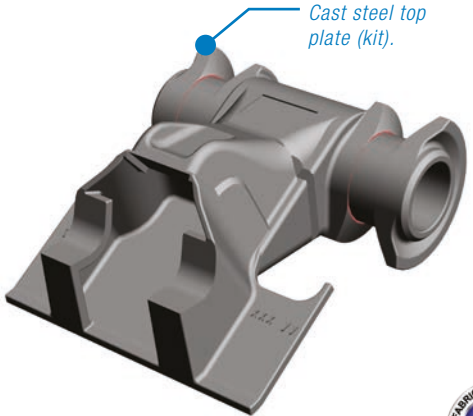

FABRIQUÉ EN FRANCE

FR UK IT SP

FOCUS ON
The double cam

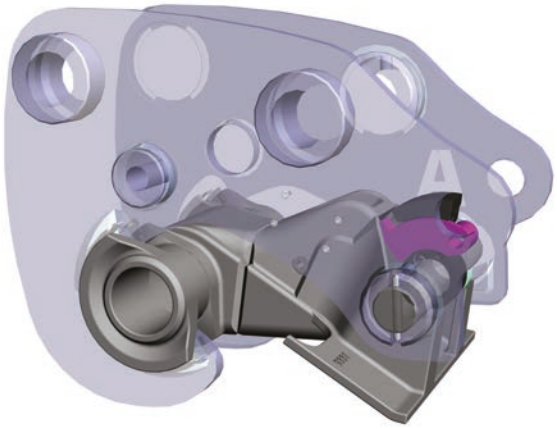

- **SIMPLE**
- **EFFICIENT**
- **ROBUST**

A dual cam prevents the attachment to unlock, even in case of loss of the engagement force.

The safety cam, attached to the main cam, ensures locking in case of failure of the springs.

For a complete disengagement, it will use the key, without any additional manipulation.

The locking is mechanical and its tripping automatic.

Very few spare parts.

No maintenance required.

ABOUT SAFETY

THE EUROPEAN STANDARD
EN474-1

Amended in 2013 now imposes specific requirements for engagement system and locking system.

AlternatiK offers a safety system compatible with Alternatic® and Retromatic® attachments: the dual cam prevents accidental unlocking at all the time and maintains the tool in working position.

You can update the existing quick hitches with the patented **AlternatiK** cam.

Attachments compatibility



HAMMER PLATES
with screws or pins



Handling **BUILT-IN RINGS**



A **WIDE RANGE OF BUCKETS:** digging, ditch cleaning, tilting, trapezoidal.

AlternatiK RANGE

	Width *(mm)*	Coupler's weight* *(kg)*	Kit's weight *(kg)*
Model 0 (1 to 2t)	190	16	5
Model 1 (2 to 3,5t)	250	29	9
Model 2 (3,5 to 5,5t)	265	48	15
Model 3 (5,5 to 9t)	350	85	23

*depending on coupler

Klac industrie

Klac industrie SAS

288, rue des Saules
ZA La Saussaye (St Cyr en Val)
45075 Orléans - Cedex 2
France

Tel. (33) 2 38 49 82 82
Fax (33) 2 38 49 82 83

contact@klac-industrie.com

www.klac-industrie.com